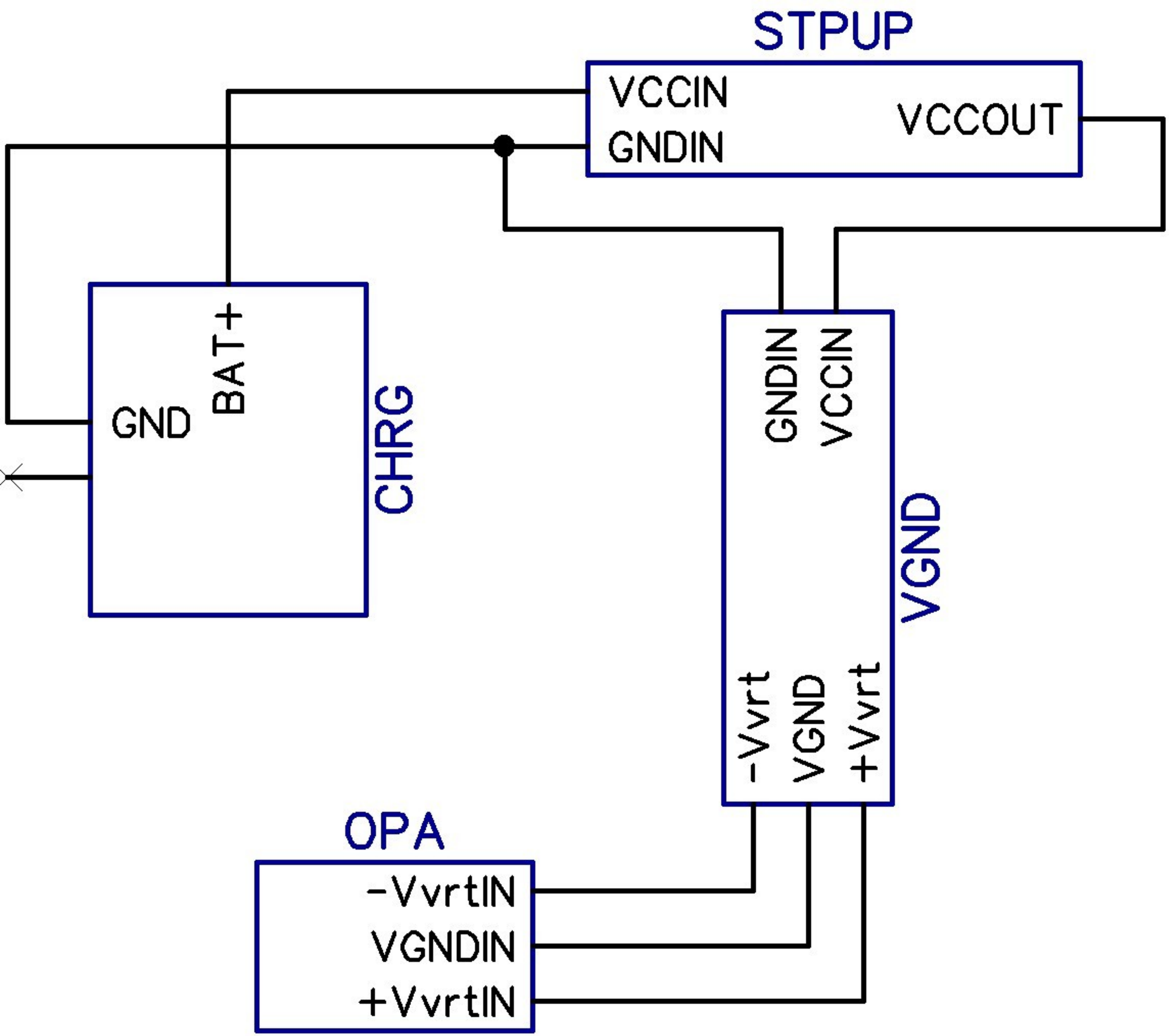
STPUP
VCCIN
GNDIN
VCCOUT
CHRG
GND
BAT+
VGND
GNDIN
VCCIN
-Vvrt
VGND
+Vvrt
OPA
-VvrtIN
VGNDIN
+VvrtIN

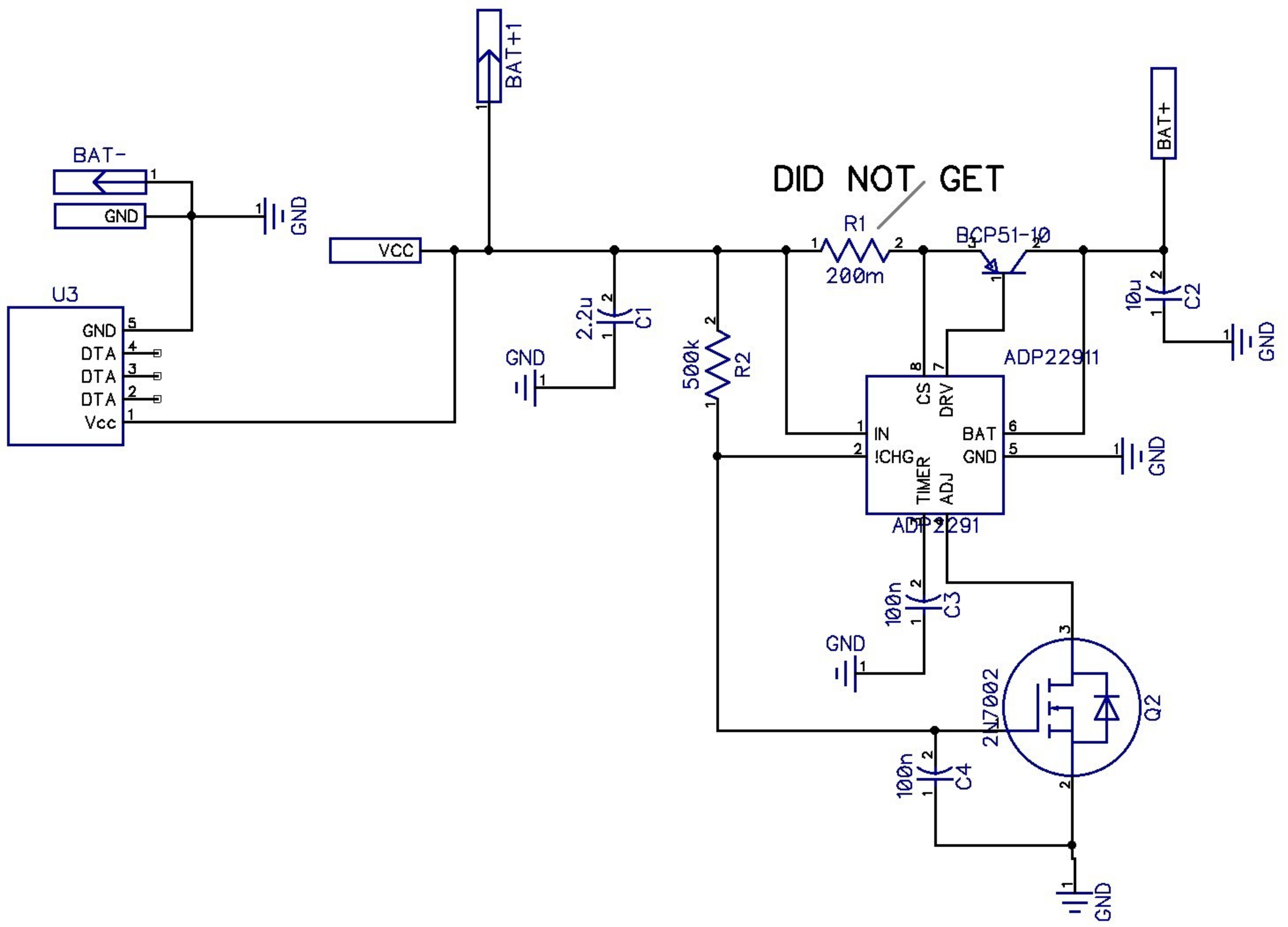
BAT+1
BAT-
GND
VCC
U3
GND
DTA
DTA
DTA
Vcc
2.2u
C1
500k
R2
DID NOT GET
R1
200m
BCP51-10
BAT+
10u
C2
ADP2291
CS
DRV
IN
!CHG
TIMER
ADJ
BAT
GND
100n
C3
2N7002
Q2
100n
C4

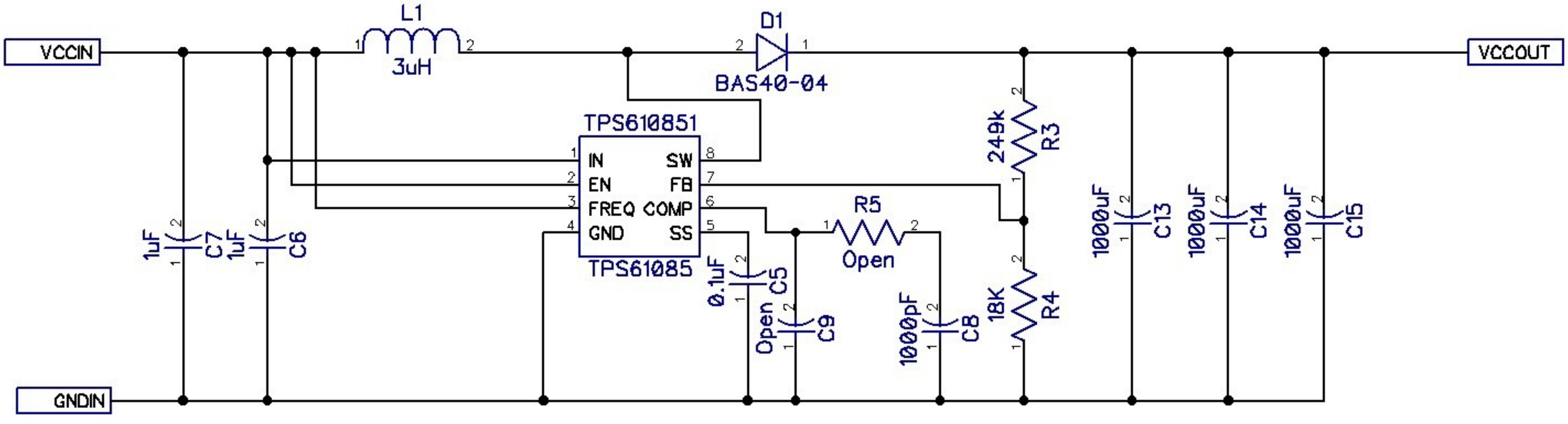
VCCIN
GNDIN
VCCOUT
L1
3uH
D1
BAS40-04
TPS610851
TPS61085
IN
EN
FREQ
GND
SW
FB
COMP
SS
1uF
C7
1uF
C6
0.1uF
C5
Open
C9
R5
Open
1000pF
C8
249k
R3
18K
R4
1000uF
C13
1000uF
C14
1000uF
C15

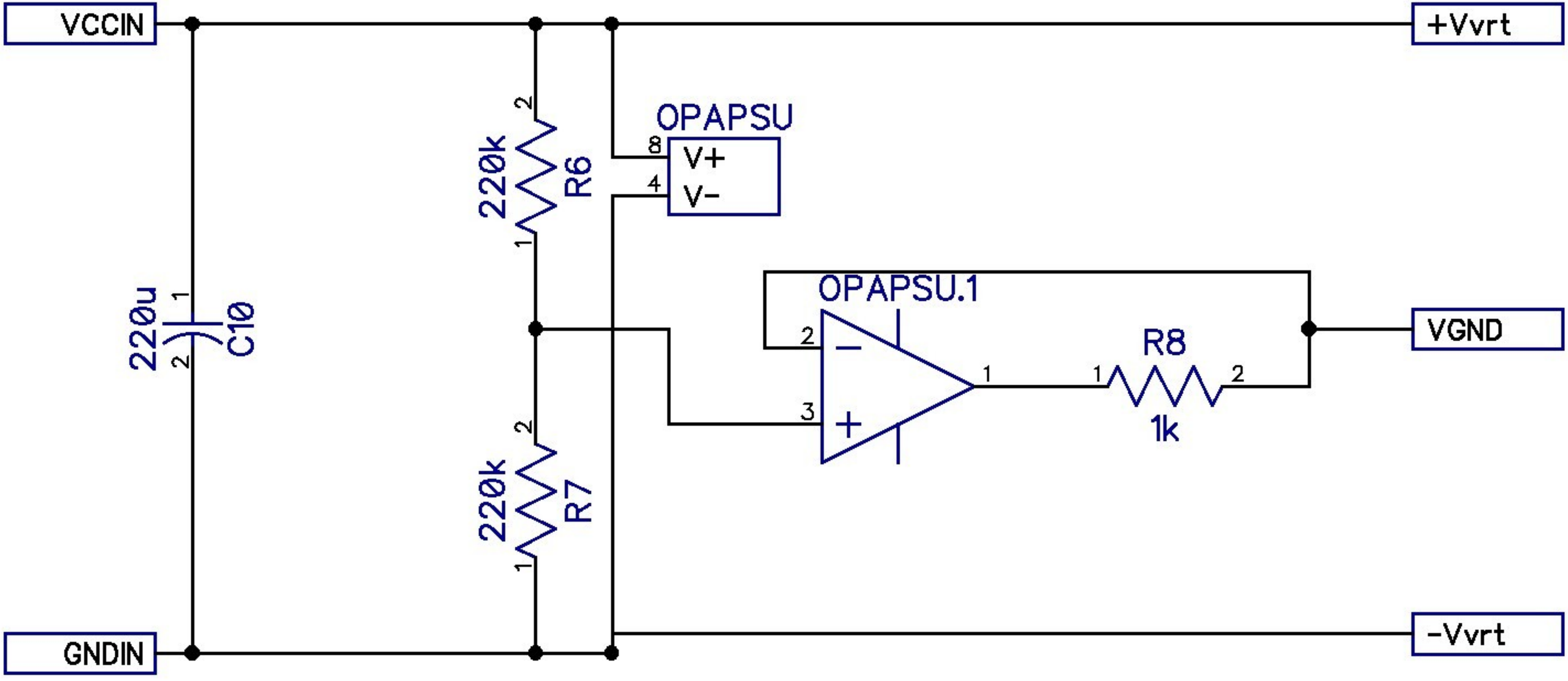
VCCIN
+Vvrt
OPAPSU
V+
V-
220k
R6
220u
C10
OPAPSU.1
R8
1k
VGND
220k
R7
GNDIN
-Vvrt

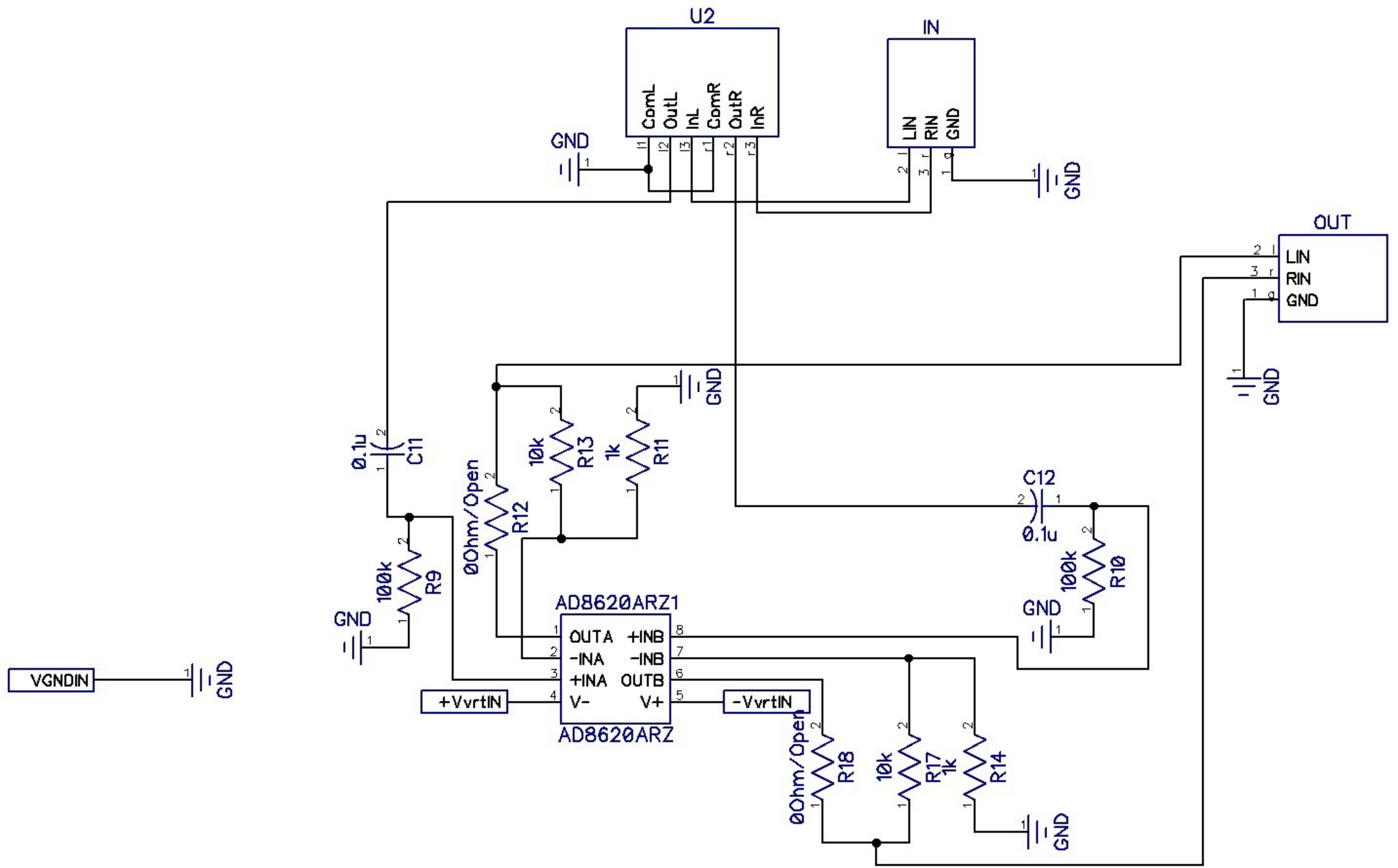
U2
ComL
OutL
InL
ComR
OutR
InR
IN
LIN
RIN
GND
OUT
LIN
RIN
GND
GND
0.1u
C11
10k
R13
1k
R11
0Ohm/Open
R12
100k
R9
C12
0.1u
100k
R10
AD8620ARZ1
OUTA
-INA
+INA
V-
+INB
-INB
OUTB
V+
AD8620ARZ
+VvrtIN
-VvrtIN
VGNDIN
0Ohm/Open
R18
10k
R17
1k
R14